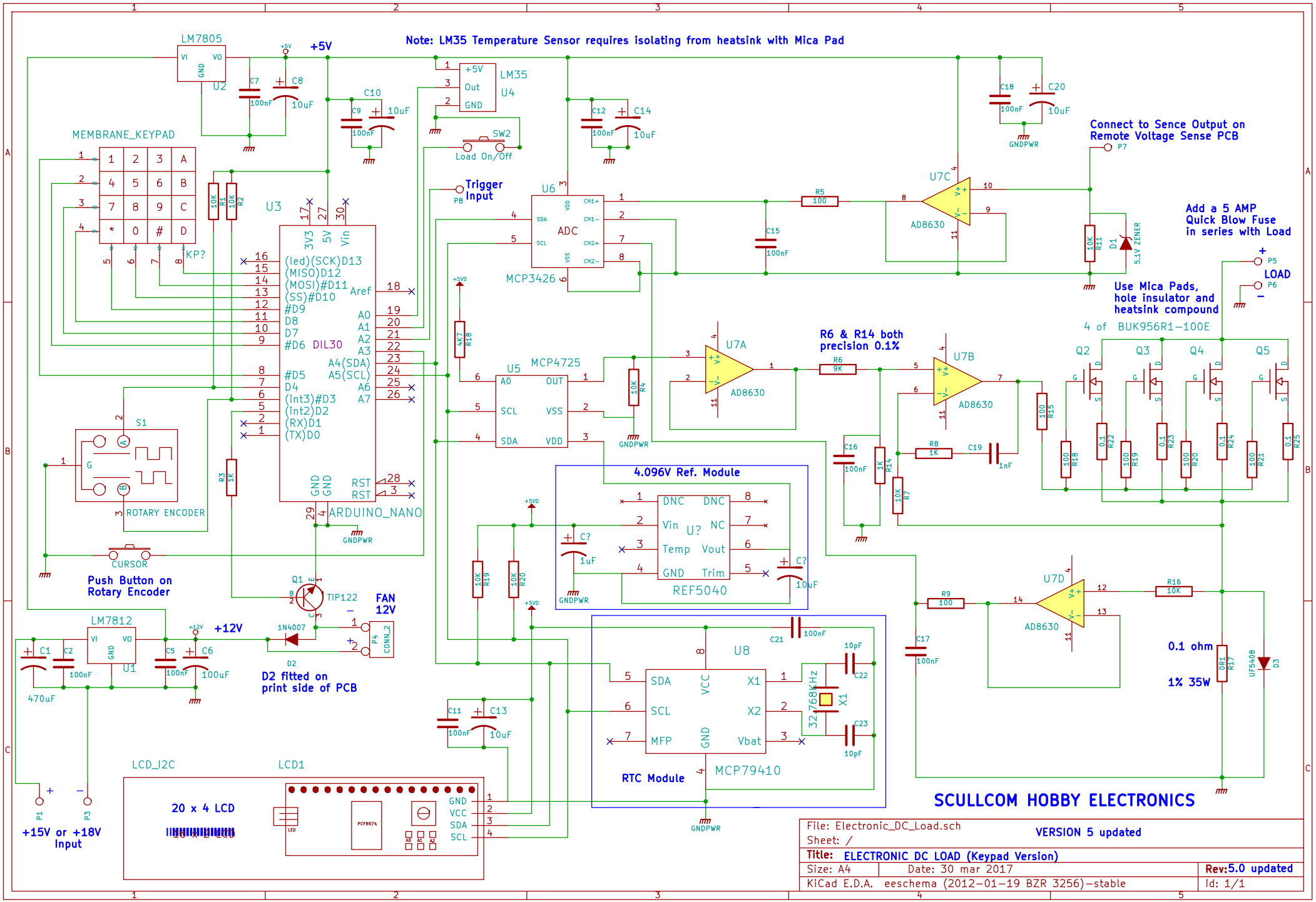
Note: LM35 Temperature Sensor requires isolating from heatsink with Mica Pad
LM7805
U2
+5V
C7 100nF
C8 10uF
C10
C9 100nF
10uF
LM35
U4
+5V
Out
GND
SW2
Load On/Off
C12 100nF
C14 10uF
C18 100nF
C20 10uF
GNDPWR
Connect to Sence Output on
Remote Voltage Sense PCB
P7
MEMBRANE_KEYPAD
KP?
U3
ARDUINO_NANO
DIL30
3V3
5V
Vin
Aref
(led)(SCK)D13
(MISO)D12
(MOSI)#D11
(SS)#D10
#D9
D8
D7
#D6
#D5
D4
(int3)#D3
(int2)D2
(RX)D1
(TX)D0
A0
A1
A2
A3
A4(SDA)
A5(SCL)
A6
A7
RST
GND
10K R1
10K R2
1K R3
Trigger
Input
P8
U6
ADC
MCP3426
SDA
SCL
VDD
VSS
CH1+
CH1-
CH2+
CH2-
R5 100
C15 100nF
U7C
AD8630
10K R11
D1
5.1V ZENER
Add a 5 AMP
Quick Blow Fuse
in series with Load
P5
LOAD
P6
Use Mica Pads,
hole insulator and
heatsink compound
4 of BUK956R1-100E
Q2
Q3
Q4
Q5
S1
ROTARY ENCODER
CURSOR
Push Button on
Rotary Encoder
4K7 R18
U5
MCP4725
AO
OUT
SCL
VSS
SDA
VDD
10K R4
U7A
AD8630
R6 & R14 both
precision 0.1%
R6 9K
U7B
AD8630
R8 1K
C19 1nF
C16 100nF
1K R14
10K R7
100 R15
100 R18
0.1 R22
100 R19
0.1 R23
100 R20
0.1 R24
100 R21
0.1 R25
4.096V Ref. Module
U?
REF5040
DNC
Vin
Temp
GND
Vout
Trim
NC
C? 1uF
C? 10uF
10K R19
10K R20
Q1
TIP122
FAN
12V
P4
CONN_2
1N4007
D2
D2 fitted on
print side of PCB
LM7812
U1
+12V
C1
C2
100nF
470uF
C5 100nF
C6 100uF
U8
MCP79410
RTC Module
SDA
SCL
MFP
VCC
GND
X1
X2
Vbat
C21 100nF
10pF C22
32.768KHz
X1
C23 10pF
C11 100nF
C13 10uF
R9 100
C17 100nF
U7D
AD8630
R16 10K
0.1 ohm
1% 35W
OR1 R17
UF5408
D3
LCD_I2C
LCD1
20 x 4 LCD
40 x 2 LCD
PCF8574
GND
VCC
SDA
SCL
P1
P3
+15V or +18V
Input
SCULLCOM HOBBY ELECTRONICS
File: Electronic_DC_Load.sch
Sheet: /
VERSION 5 updated
Title: ELECTRONIC DC LOAD (Keypad Version)
Size: A4
Date: 30 mar 2017
Rev:5.0 updated
KiCad E.D.A. eeschema (2012-01-19 BZR 3256)-stable
Id: 1/1